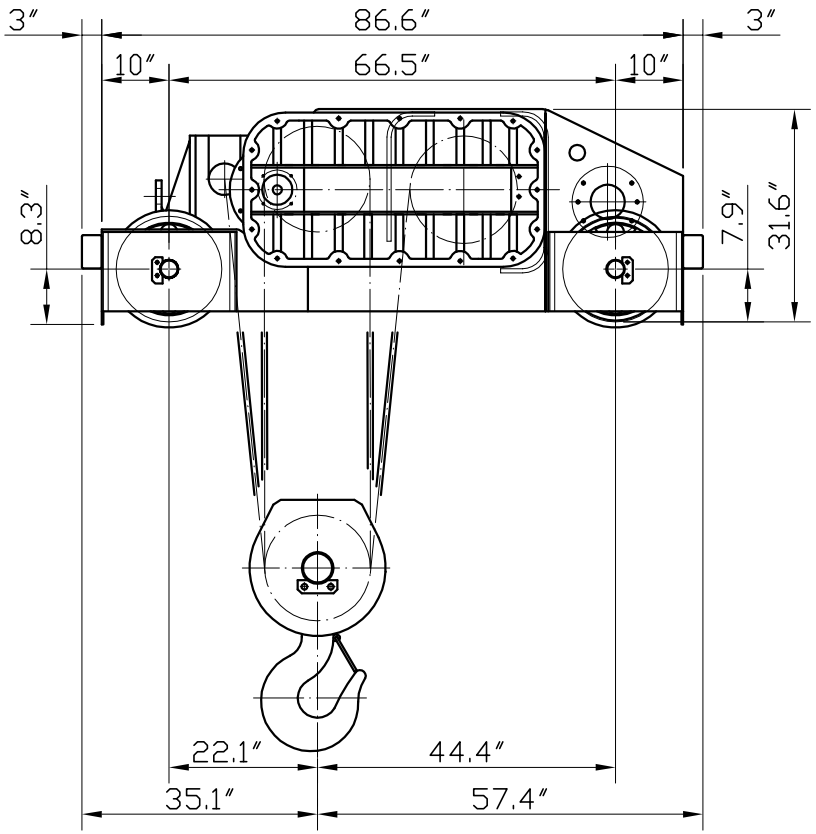


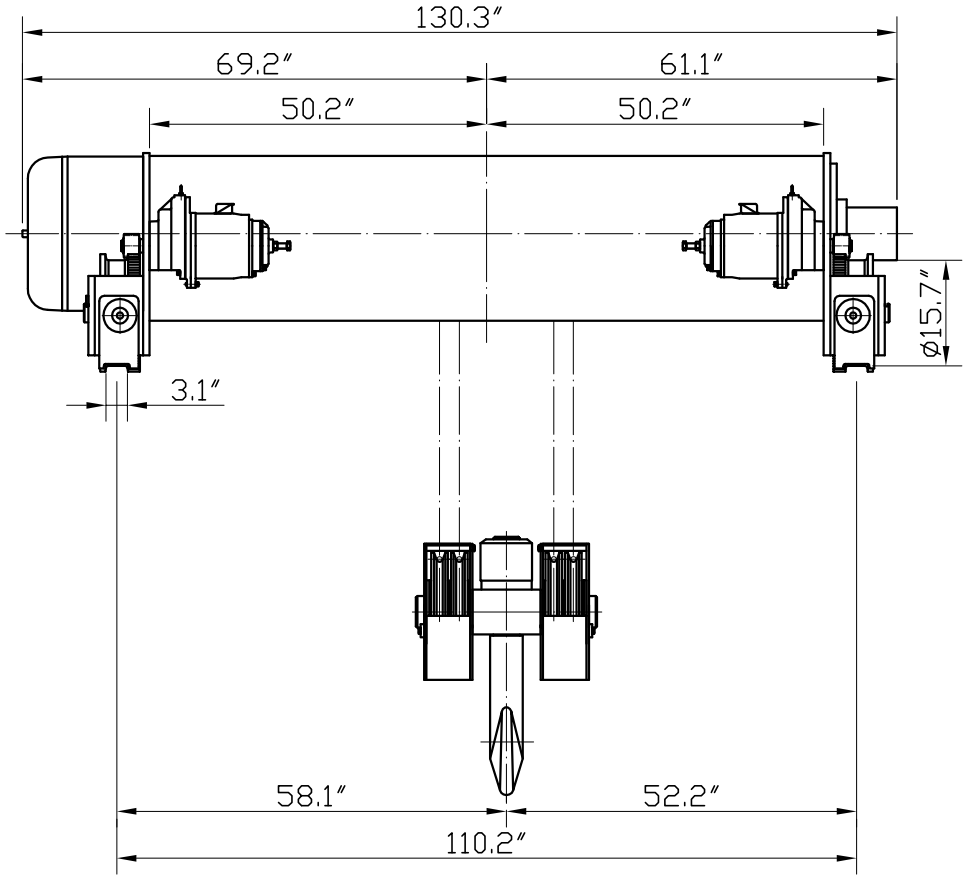


| Specification | | | |
|---|---|---|---|
| Model | SUGJD-4000-40Ft | | |
| Rated Load | 88000 lbs | | |
| Lift | 40 ft | | |
| Wire Rope | ø20mm 4PD | | |
| Motion | Motor | | Speed |
| | HP | Pole | ft/min |
| Main Hoisting | 40/13.4 | 4/12 | 9.9/3.3 |
| Aux. Hoisting | - | - | - |
| Traversing | 3/1x2 | 4/12 | 59/20 |
| Net Weight | Approx. 13875 lbs | | |
| Power Source | 3ø 60HZ | | |

| ITEM NO. | DESCRIPTION | QTY. | MATERIAL | WEIGHT | PARTS. NO. |
|---|---|---|---|---|---|
| – | – | – | | | |

| | | | | | |
|---|---|---|---|---|---|
| PARTS NO. | – | DWG. NO. | | DWG. NAME | Hoist Ass. SUGJD-4000-40Ft |

| | | | | | | | | | | |
|---|---|---|---|---|---|---|---|---|---|---|
| △ | | | | DRAWN | W.C.W | SCALE | 1:30 A4 | HEAT TREAT. | – | CHENG DAY MACHINERY WORKS CO., LTD. |
| △ | | | | DESIGN | W.C.W | ASS. NO. | | HARDNESS | – | |
| SIGN | CORRECTION | CORRECTOR | DATE | CHECKED | M.H.Lin | DATE | 4/9'09 | | | |